Lifelong Learning Programme

one2one
One teacher and one student working with ProjectX

Teaching induction machine laboratory using ProjectX

Robert Beloiu

University of Pitesti

Romania

World Conference on Educational Technology Researches

UNIVERSITATEA DIN PITEȘTI 1962
Academia magistra vitae

Introduction

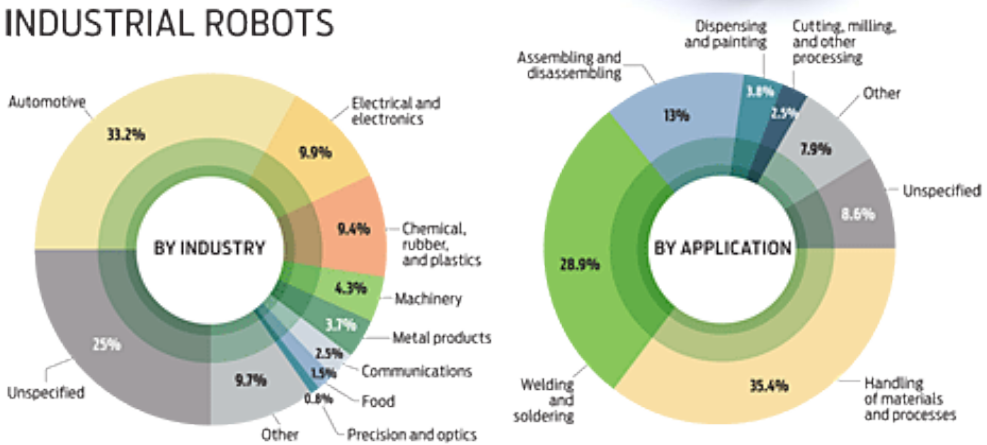

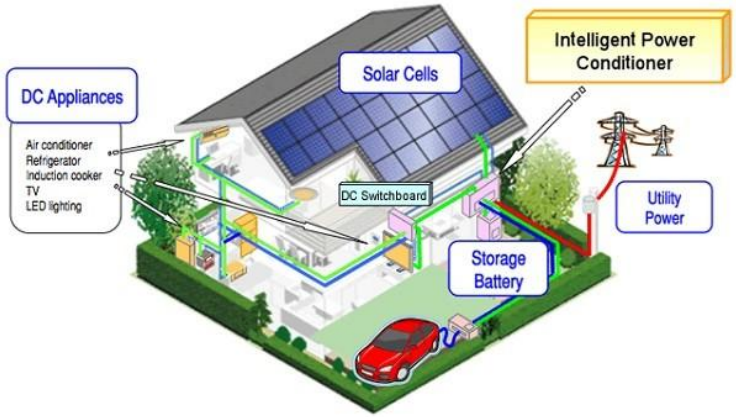

Introduction

=>

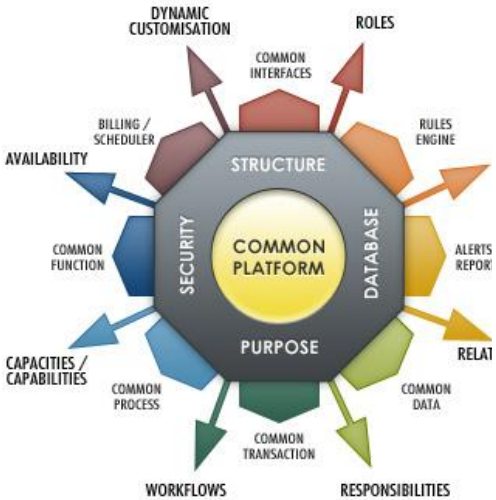

Leonardo da Vinci: ToI

European partneship

xaBec

SAVON KOULUTUSKUNTAYHTYMÄ

SOUTH & CITY COLLEGE BIRMINGHAM

ESCOLA PROFISSIONAL ValdoRio

Lycée Polyvalent Isaac Newton

Induction machine

- The induction machine is the most used electric machine in industry – 90%
- The squirrel cage induction machine is the most efficient as far as production and maintenance cost of all the induction machines.

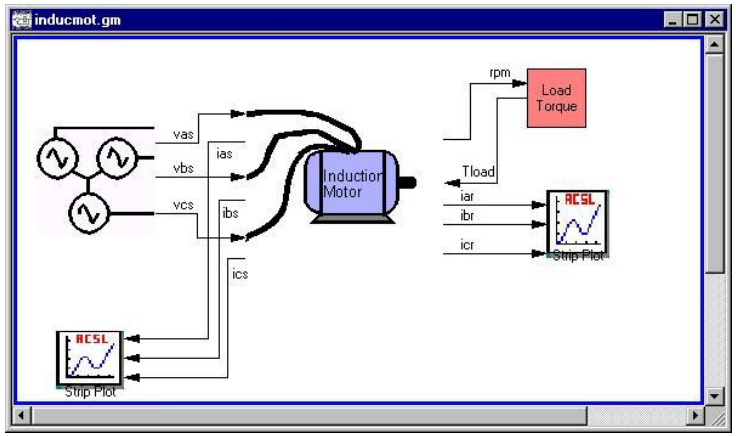

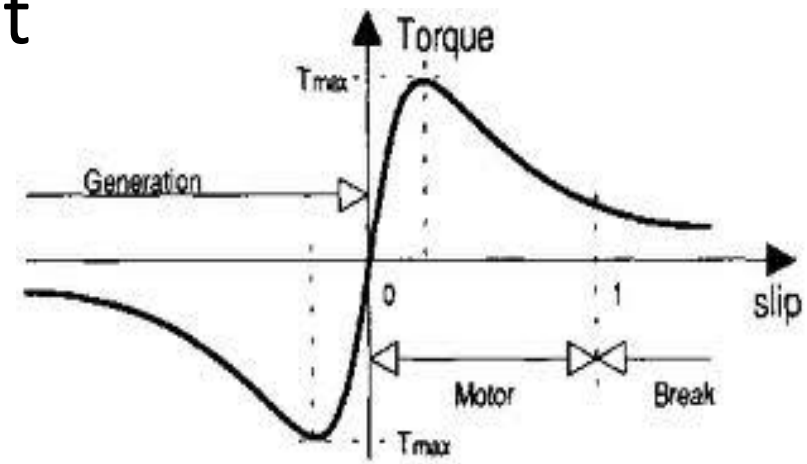

Previous knowlege

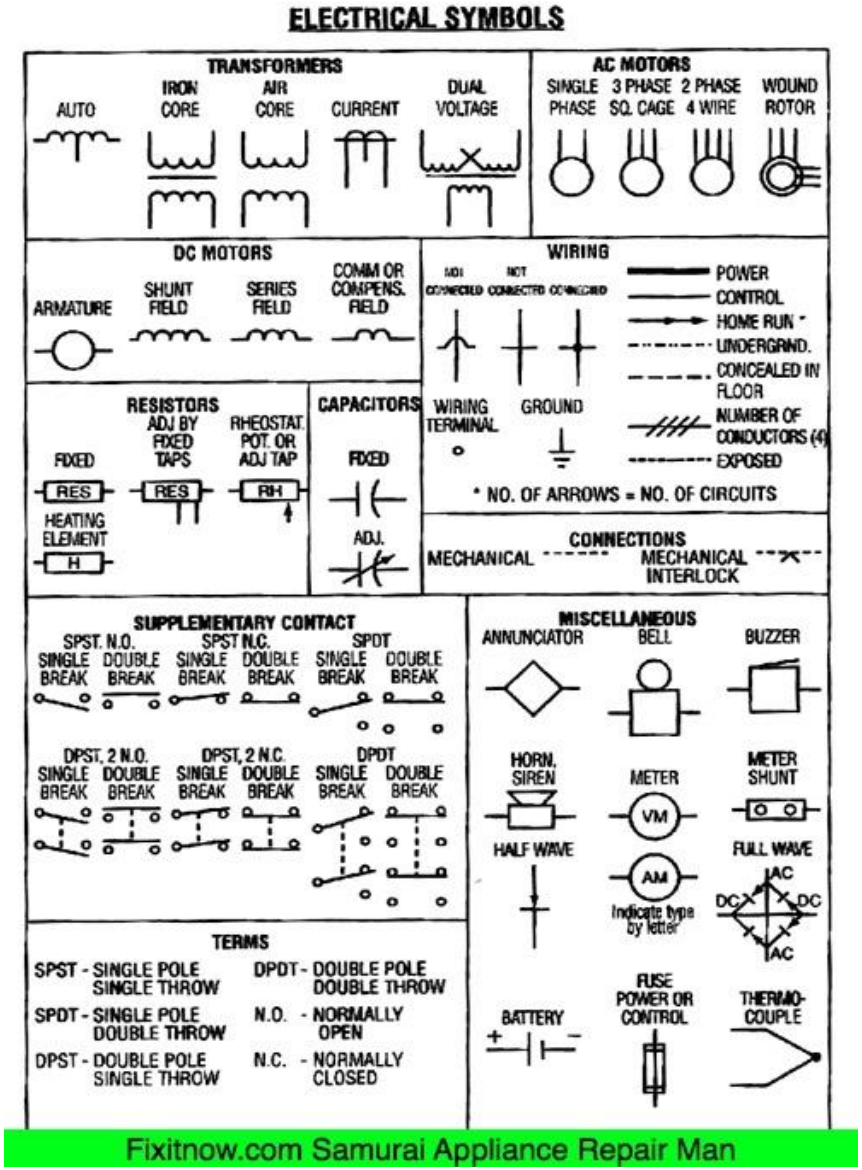

Fixitnow.com Samurai Appliance Repair Man

Direct start of the induction machine - 1

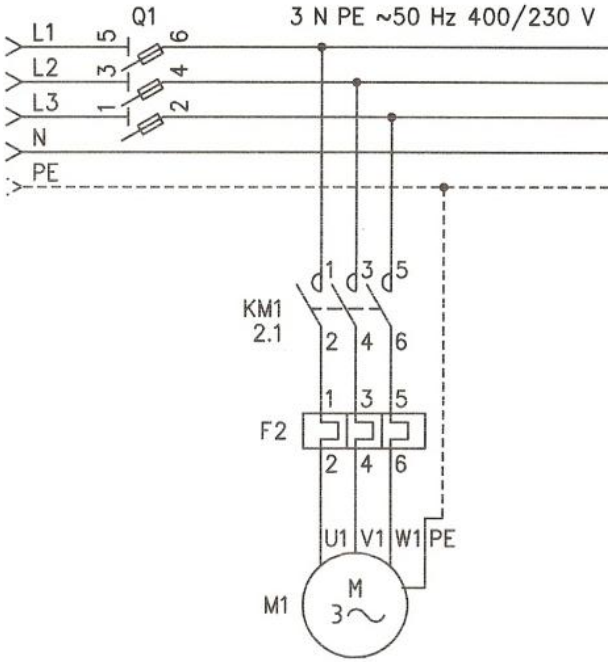

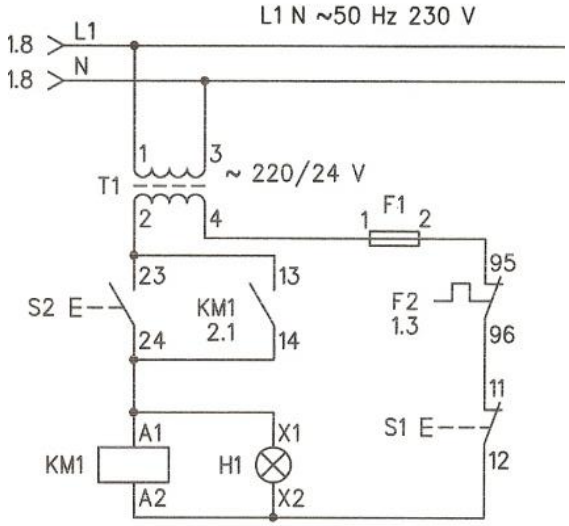

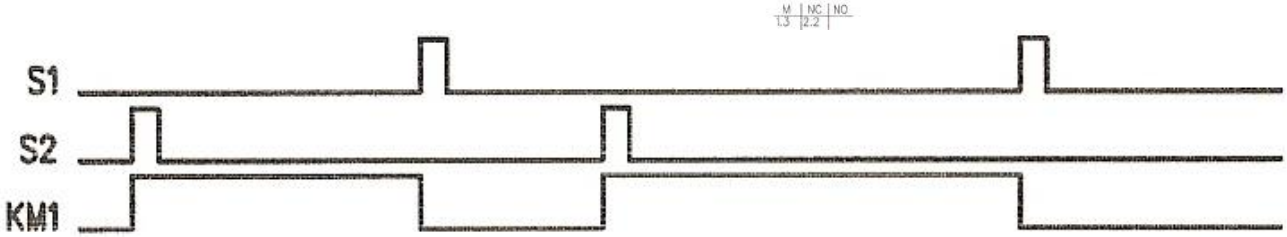

KM1 = (S2 **AND** (**NOT** S1)) **OR** (KM1 **AND** (**NOT** S1))

Direct start of the induction machine - 2

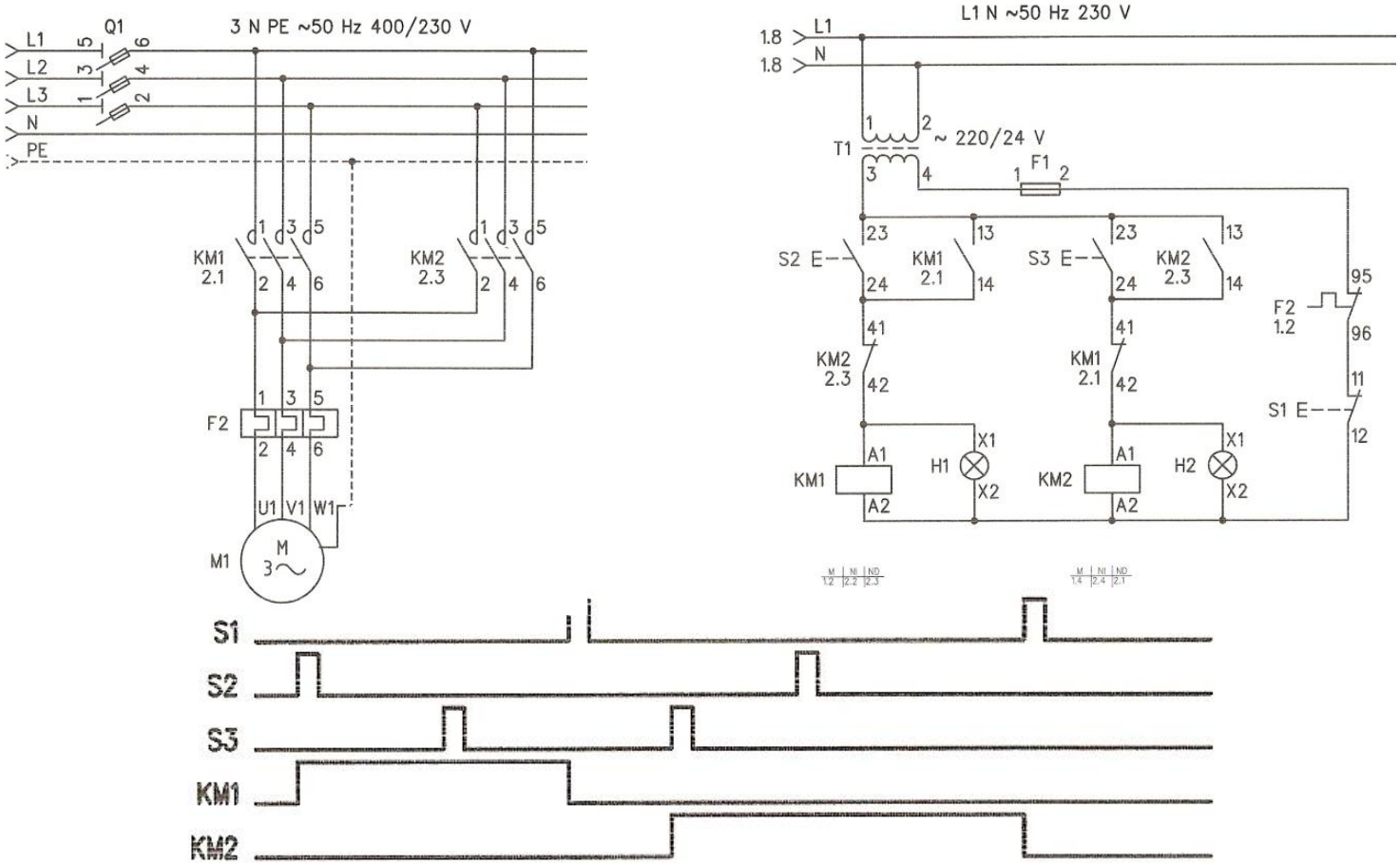

KM1 = (**NOT** KM2) **AND** ((S2 **AND** (**NOT** S1)) **OR** (KM1 **AND** (**NOT** S1)))
KM2 = (**NOT** KM1) **AND** ((S3 **AND** (**NOT** S1)) **OR** (KM2 **AND** (**NOT** S1)))

Indirect star-triangle start of the induction machine - 1

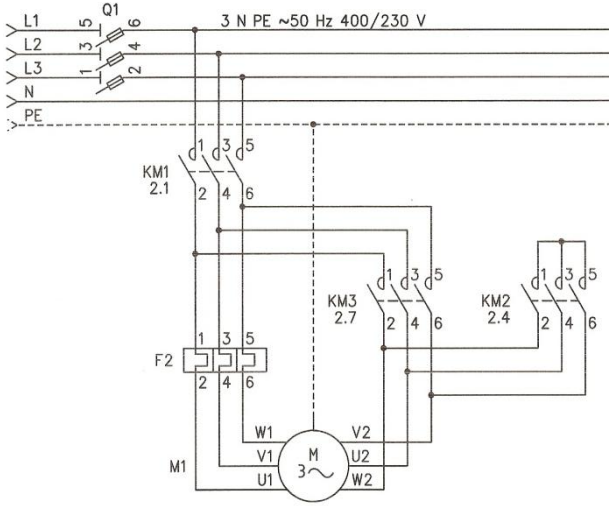

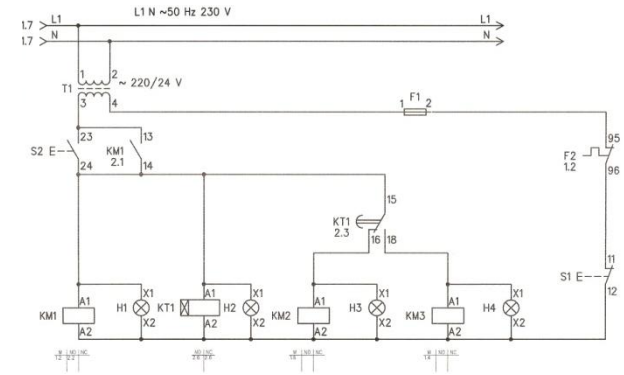

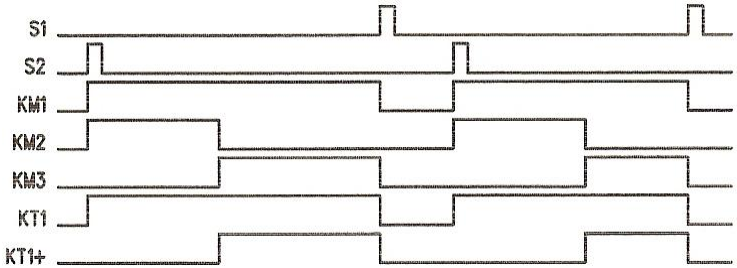

KM1 = (S2 **AND** (**NOT** S1)) **OR** (KM1 **AND** (**NOT** S1))
KM2 = (**NOT** KT1+) **AND** ((KM1 **AND** (**NOT** S1)) **OR** (S2 **AND** (**NOT** S1)))
KM3 = KT1+ **AND** ((KM1 **AND** (**NOT** S1)) **OR** (S2 **AND** (**NOT** S1)))
KT1 = (KM1 **AND** (**NOT** S1)) **OR** (S2 **AND** (**NOT** S1))

Indirect star-triangle start of the induction machine - 2

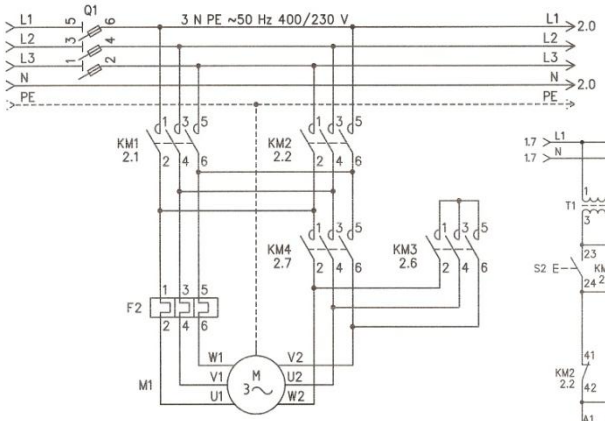

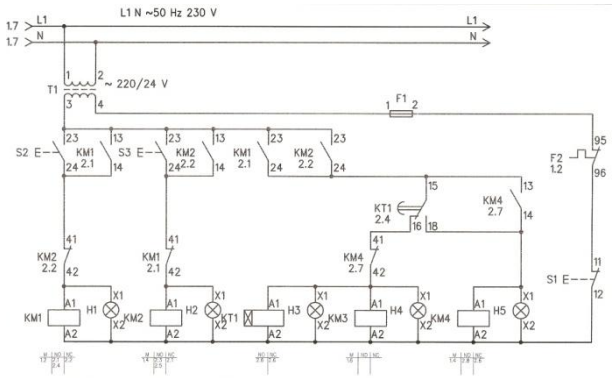

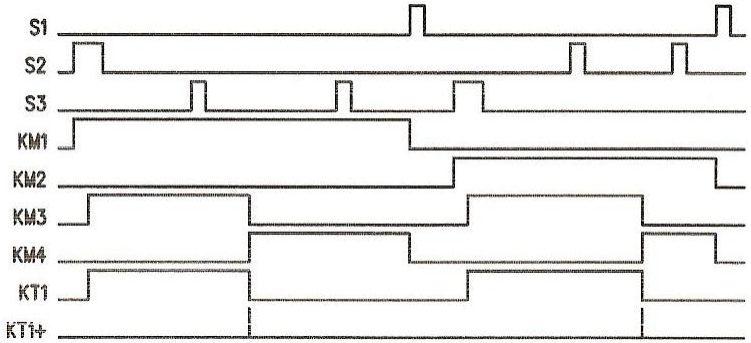

KM1 = (**NOT** KM2) **AND** ((S2 **AND** (**NOT** S1)) **OR** (KM1 **AND** (**NOT** S1)))
KM2 = (**NOT** KM1) **AND** ((S3 **AND** (**NOT** S1)) **OR** (KM2 **AND** (**NOT** S1)))
KM3 = (**NOT** KM4) **AND** (**NOT** KT1+) **AND** ((KM2 **AND** (**NOT** S1)) **OR** (KM1 **AND** (**NOT** S1)))
KM4 = (KT1+ **AND** ((KM2 **AND** (**NOT** S1)) **OR** (KM1 **AND** (**NOT** S1)))) **OR** (KM4 **AND** ((KM2 **AND** (**NOT** S1)) **OR** (KM1 **AND** (**NOT** S1))))
KT1 = (**NOT** KM4) **AND** (**NOT** KT1+) **AND** ((KM2 **AND** (**NOT** S1)) **OR** (KM1 **AND** (**NOT** S1)))

PLC start of the induction machine - 1

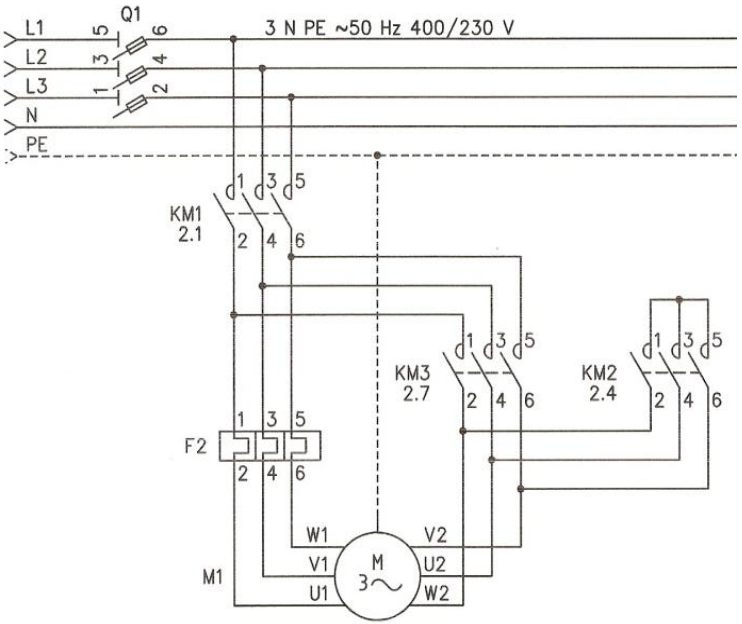

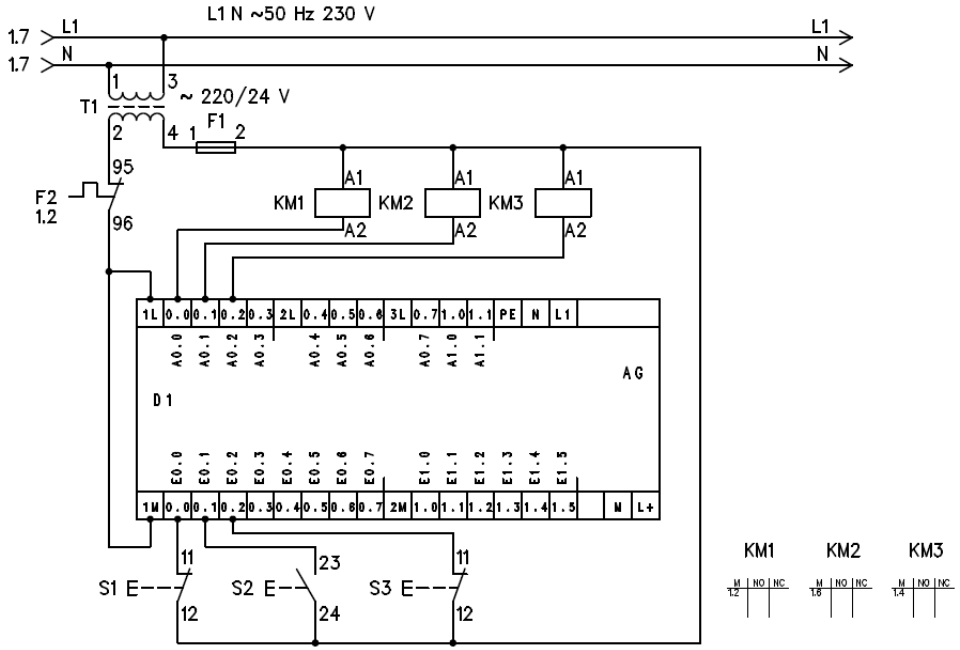

PLC start of the induction machine - 2

PROGRAM COMMENTS

Network 1

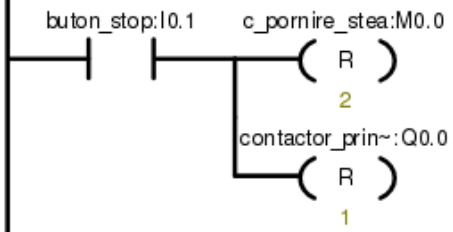

Symbol	Address
buton_stop	I0.1
c_pornire_stea	M0.0
contactor_principal	Q0.0

Network 2 Network Title

Network Comment

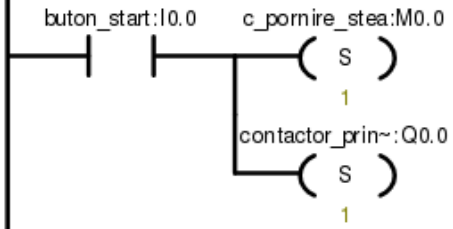

Symbol	Address
buton_start	I0.0
c_pornire_stea	M0.0
contactor_principal	Q0.0

Network 3

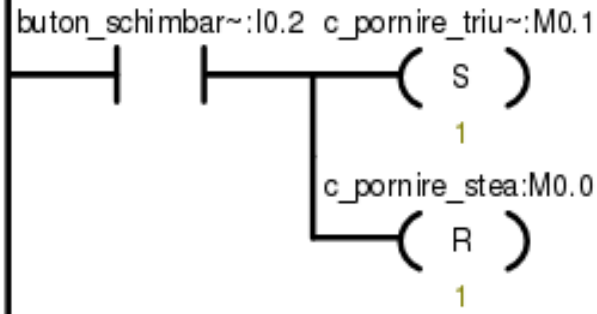

Symbol	Address
buton_schimbare_sens	I0.2
c_pornire_stea	M0.0
c_pornire_triunghi	M0.1

Comment

Network 4

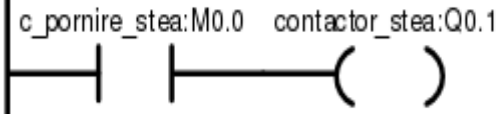

Symbol	Address	Comment
c_pornire_stea	M0.0	
contactor_stea	Q0.1	

Network 5

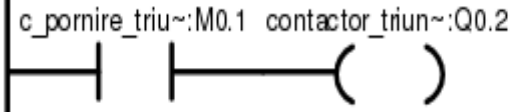

Symbol	Address	Comment
c_pornire_triunghi	M0.1	
contactor_triunghi	Q0.2	

Learning outcomes - 1

Learning Outcome 1:	Analyze the electric schematic for starting an induction machine	
Knowledge:	**Skills:**	**Competences:**
•To know the electrical symbols used in electric schematics	•Understand the function of schematic for starting electric motors	•Cognitive competence: to be able to read an electric schematic •Functional competence: to be able to analyze the function of a basic electric schematic • Personal competence: to be able to communicate with team members when analyzing a schematic; • Ethical competence: to be able to work in team

Learning outcomes - 2

Learning Outcome 2:	Perform electrical installations and electrical maintenance for industrial premises	
Knowledge:	**Skills:**	**Competences:**
•To identify the appropriate terminals of involved components in the force and command schematic	•Perform connections in the command and force schematics. Use the appropriate tools to detect a defect in a schematic: voltmeter, ohmmeter, and ammeter.	•Cognitive competence: to identify the appropriate terminals of the electric apparatus •Functional competence: be able to wire different apparatus in the schematic. To be able to connect in an electric circuit basic measurement apparatus: V, Ω, A • Personal competence: to be able to communicate with team members when analyzing a schematic; • Ethical competence: be able to work in team

Learning outcomes - 3

Learning Outcome 3:	Install programmable automated systems	
Knowledge:	**Skills:**	**Competences:**
•To identify the terminals of a certain PLC and the required voltages' levels to be applied.	•Perform connection to the PLC terminals according the schematic.	•Cognitive competence: to identify the appropriate terminals of the PLC using the manual •Functional competence: be able to wire different terminals of the PLC according the schematic • Personal competence: to be able to communicate with team members when analyzing a schematic; • Ethical competence: be able to work in team

Learning outcomes - 4

Learning Outcome 4:	Write simple PLC program for sequential control systems	
Knowledge:	**Skills:**	**Competences:**
•To be able to understand basic instructions to program a PLC	•To be able to use basic instructions to program a PLC	•Cognitive competence: to identify different visual basic symbols used in PLC programming •Functional competence: be able to use visual basic instructions for PLC programming • Personal competence: to be able to communicate with team members when analyzing a schematic; • Ethical competence: be able to work in team

Conclusion

This paper, presented a way of teaching the starting of the induction machine in different ways: both classic as advance methods.

The students will be able to:

- Read technical schematic
- Implement an electric schematic using classic apparatus and PLC
- Develop self-esteem as they have a great independency

The fact that this method is developed at the same time in different educational institutions in Europe, is setting basis for student and teacher exchange.

Acknowledgement & Disclaimer

This paper is part of the project “One teacher and one student working with ProjectX”, project code 2013-1-ES1-LEO01-66485, acronym “One2one”, funded with support from the European Commission, through Leonardo da Vinci, Transfer of Innovation program.

This project has been funded with support from the European Commission. This publication reflects the views only of the author, and the Commission cannot be held responsible for any use which may be made of the information contained therein.

Lifelong Learning Programme

UNIVERSITATEA DIN PITEȘTI 1962 academia magistra vitae

one2one
One teacher and one student working with ProjectX

Lifelong Learning Programme

UNIVERSITATEA DIN PITEȘTI 1962
academia magistra vitae

one2one
One teacher and one student working with ProjectX

WCETR World Conference on Educational Technology Researches

Thank you for your attention!

Robert Beloiu
robertbeloiu@yahoo.com